RoHS Compliant

Specifications:
Material And Finish:
Insulator:PBT UL94V-0 Color:Black
Contact:Brass
Plated:See Ordering Information

Rating:
Current Rating:10.0 Amp
Voltage Rating:250V AC/DC
Operating Temperature Range:-40°~+105°C

Electrical:
Contact resistance:20m Ohm Max
Insulator resistance:1000M ohm min.
Withstanding Voltage:2000V AC/Minute

Ordering Information

A400005R-14X-01-C
(1: A400005, 2: R, 3: 14, 4: X, 5: C)

1: —— Series No.
2: —— R:R/A Type
3: —— No. of Positions
4: —— A:Gold Flash
H:Gold Flash on Contact;Matte Tin on tail
G:20u" Gold on Contact;Matte Tin on tail
S:Matte Tin Plated
5: —— C:In Tray

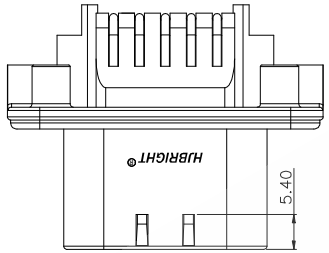

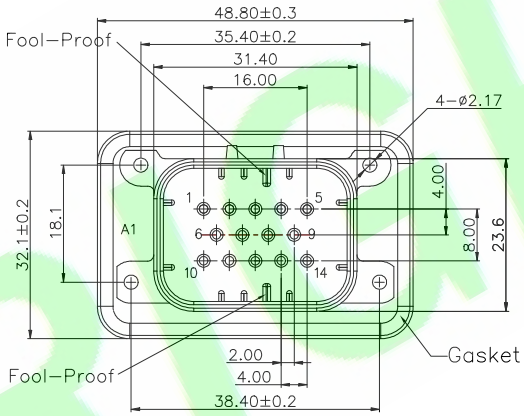

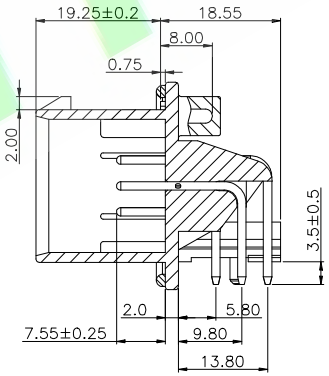

SEC A-A

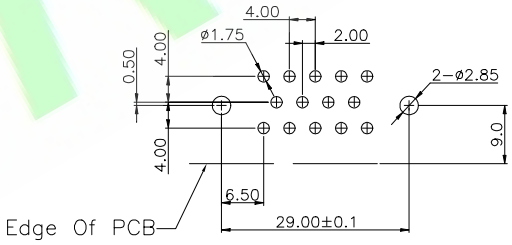

Recommended PCB Layout

REV.	DESCRIPTION	DR.BY	ECN. NO.
3X	Update electrical performance parameters	Judyyan	20250317
2X	Update code option	DENG	20230411
1X	ORIGINAL	Kenry	

DR.BY.: Kenry
CHKD.: Tony
APPD.: Billy

GENERAL TOLERANCE: LINEAR		ANGLES	
X.:	±0.30	X°:	±5.0°
X.X:	±0.20	X.X°:	±3.0°
X.XX:	±0.15	X.XX°:	±2.0°
X.XXX:	±0.10	X.XXX°:	±1.0°

PART NO : A400005R-14X-01-C
DWG. NO.:
TITLE : 4.00mm Pitch Header Assembly,R/A Type
DATE: 19-Jan-2015

HJBRIGHT® 東莞市華晶電子有限公司
BRIGHT-E ELECTRONIC TECHNOLOGY LIMITED

SHEET: 1/1
SCALE: 1:1
UNIT: mm
THIRD ANGLE PROJECTION
A4